NOTE: CONFORM TO C.O.S. STANDARD DWG. 55 FOR ALL OTHER CONSTRUCTION CRITERIA NOT SPECIFIED HERE.

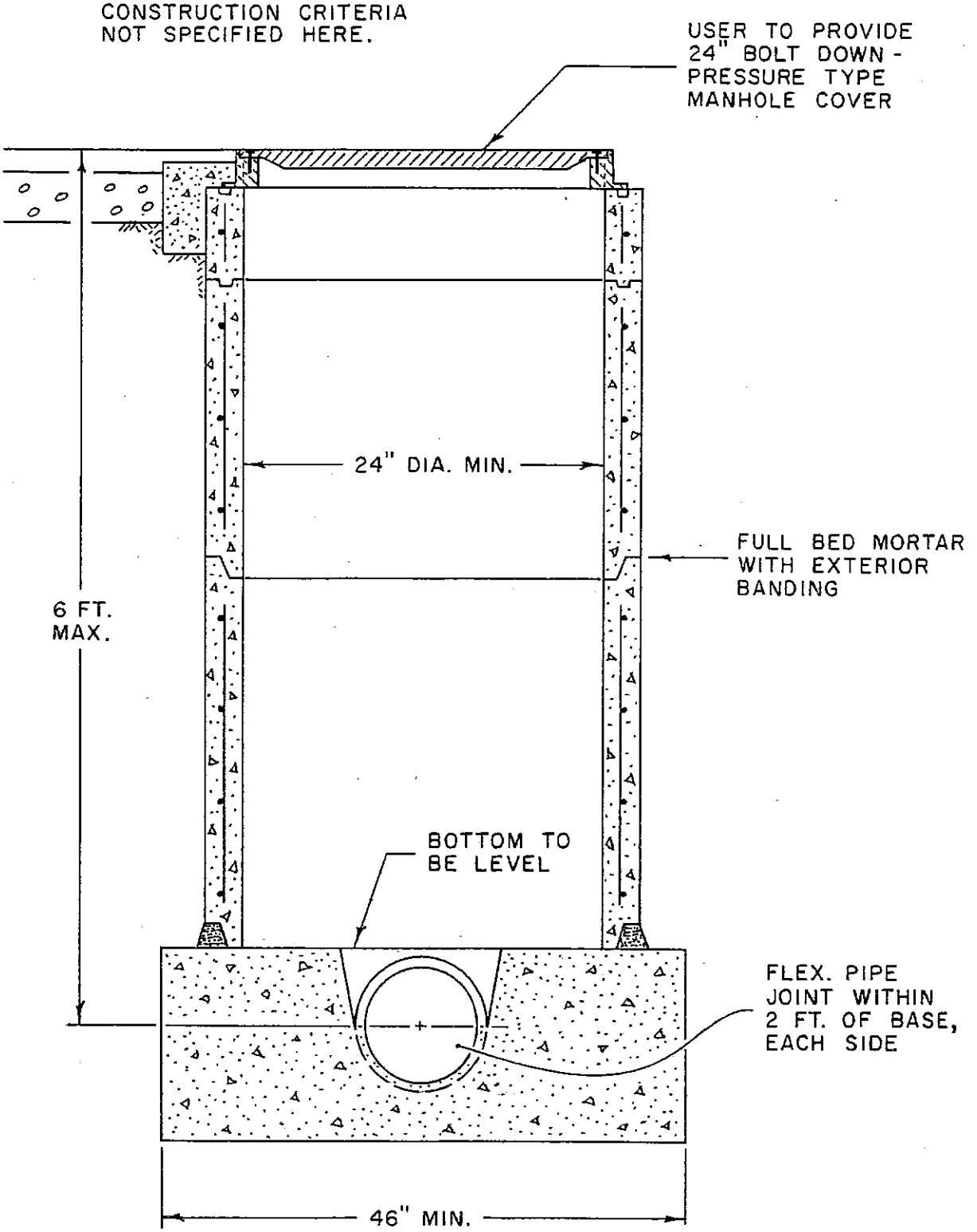

No.	Revised	By	PRETREATMENT SAMPLING MANHOLE (ONSITE ONLY)	Approved by
				Engineer
Drawn by	T. S.			
Checked by			CITY OF STOCKTON MUNICIPAL UTILITIES DEPARTMENT	Date
Scale	None			Drawing No.

DIMENSIONS FOR PACKAGED METERING MANHOLE

NOTE: CONFORM TO C.O.S. STANDARD DWG. 55 FOR ALL OTHER CONSTRUCTION CRITERIA NOT SPECIFIED HERE.

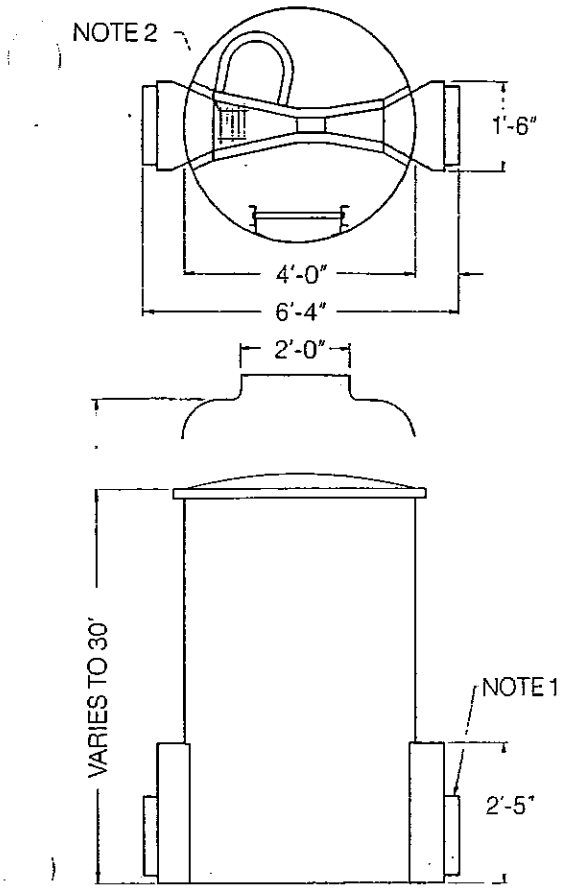

3" Parshall Flume

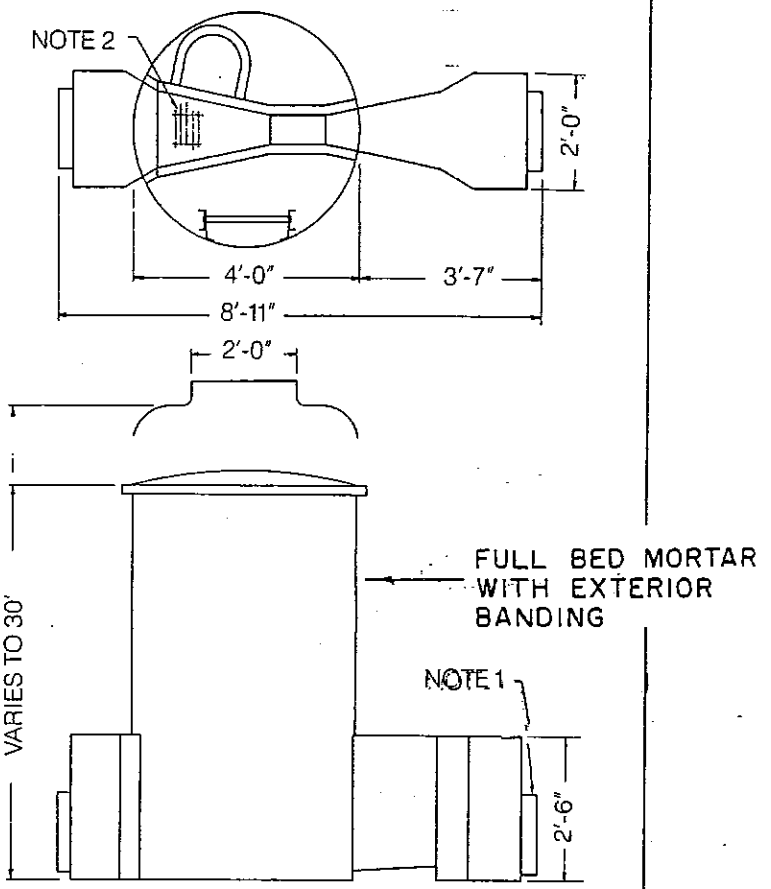

6" Parshall Flume

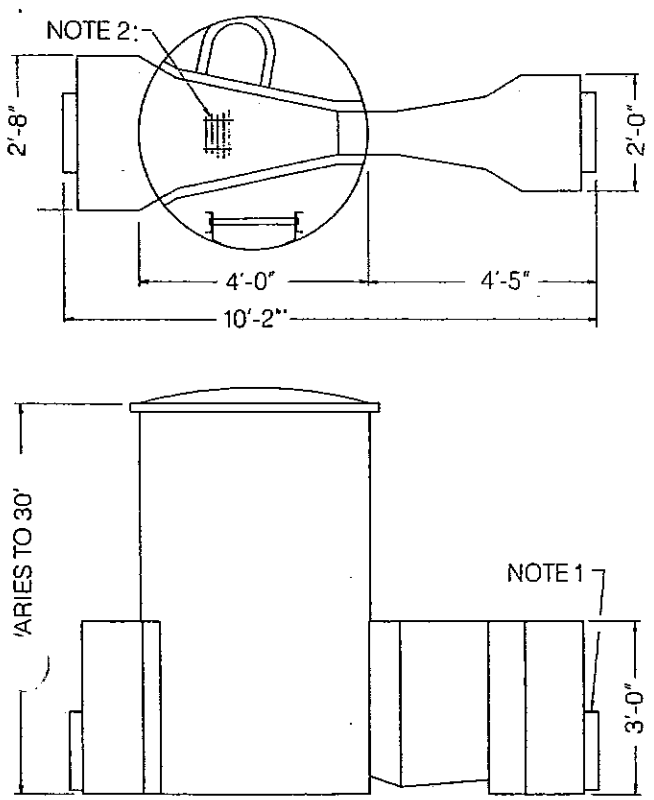

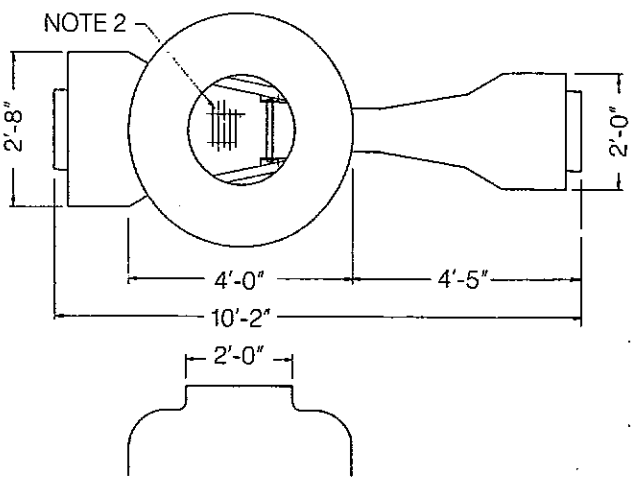

9" Parshall Flume

NOTE 1
Inlet and outlet sleeve size varies with connecting pipe diameter.

NOTE 2
Fiberglass grating or cover on flume optional.

NOTE 3 TRAFFIC GRADE, LOCKABLE MANHOLE COVER REQUIRED